SPECIFICATION

Current Rate:3 AMP
Insulation Resistance:1000M Ω Min
Contact Resistance:20m Ω Max
Dielectric voltage:500V AC for one minute
Operation Temperature:-55°C to +105°C

MATERIAL

Insulator:PBT+30% Glass Fiber(UL94V-0)
Terminal:Copper Alloy

ORDER INFORMATION

D B E - F 0 9 S B T F 5.4/12.7 - L

- 09: No. of contacts
- S: ◎S:Selective; SF:15u"; SD:30u"
- B: B:Black Insulator
- T: ◎T:Tin shell
- F: F:Rear rivet boardlock
- 5.4/12.7: Fill In Dimension For Special Design
- L: L:RoHS + P.B.T

◎:Standard Recommend

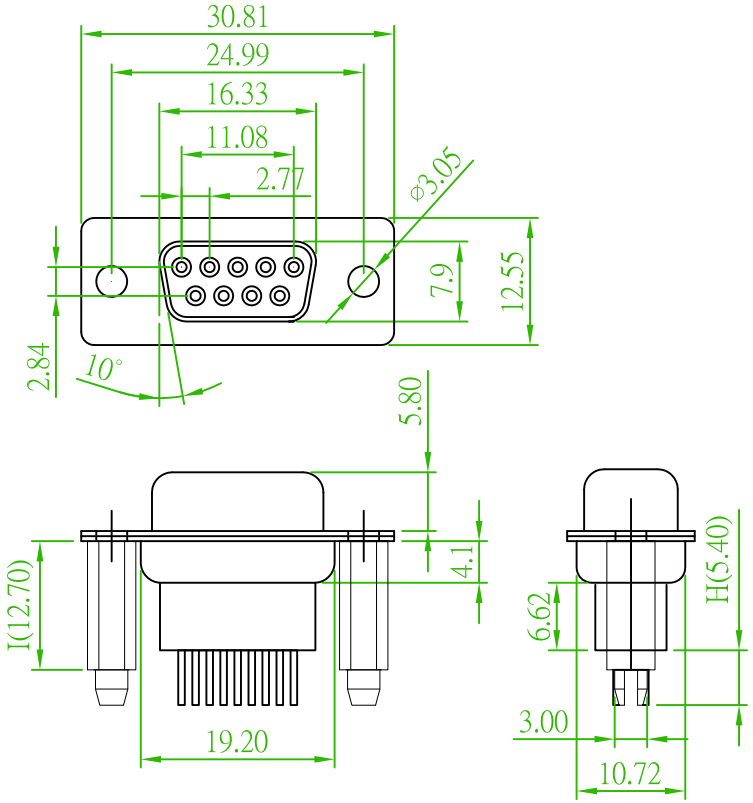

AREA	REV.	DESCRIPTION	DATE

糧德精密有限公司
Amtek Technology Co., Ltd.
TEL:886-2-2268-8036
FAX:886-2-2268-8035

品 名 TITLE	D-SUB P.C.B STRAIGHT EVATED TYPE				
品 號 PART NO.	DBE-F09SBTF5.4/12.7-L			日 期 DATE	2012/02/17
圖 號 DRAWING NO.	DBE-F09SBTF5.4/12.7-L	版 本 REV.	A	繪 圖 DRAWN	Joe
客戶品號 CUSTOMER P/N		比 例 SCALE	FREE	核 對 CHECKED	Jenny
公 差 TOLERANCE	.X ±0.25 .XX ±0.20	單 位 UNIT	mm	核 准 APPROVED	James